REPAIR QUANTITY TABLE

REPAIRS END BENT 2	ESTIMATE	ACTUAL
FLOWABLE FILL	0.5 CU.YDS.	

NOTES:

TEMPERATURE SHALL BE AT LEAST 40°F WHEN PLACING FLOWABLE FILL.

CLEAN AREA UNDER CAP PRIOR TO PLACING FLOWABLE FILL.

FOR FLOWABLE FILL, SEE SPECIAL PROVISIONS.

APPROXIMATE FLOWABLE FILL BOUNDARY LIMITS

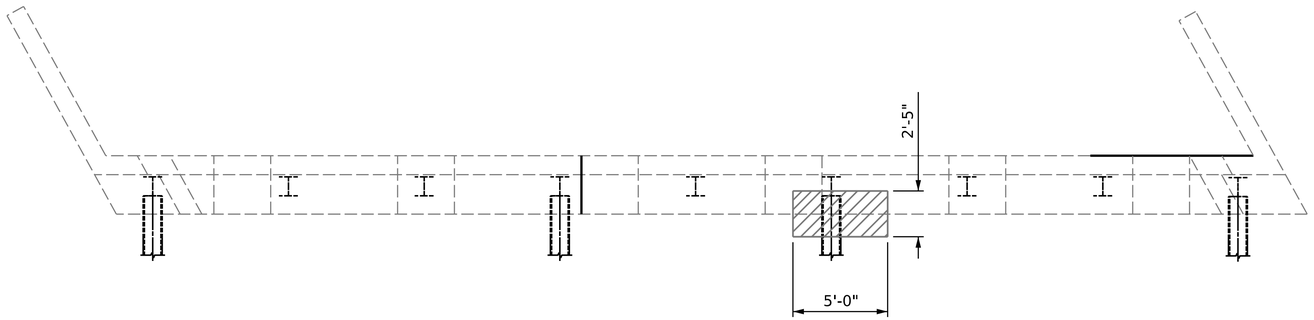

PLAN

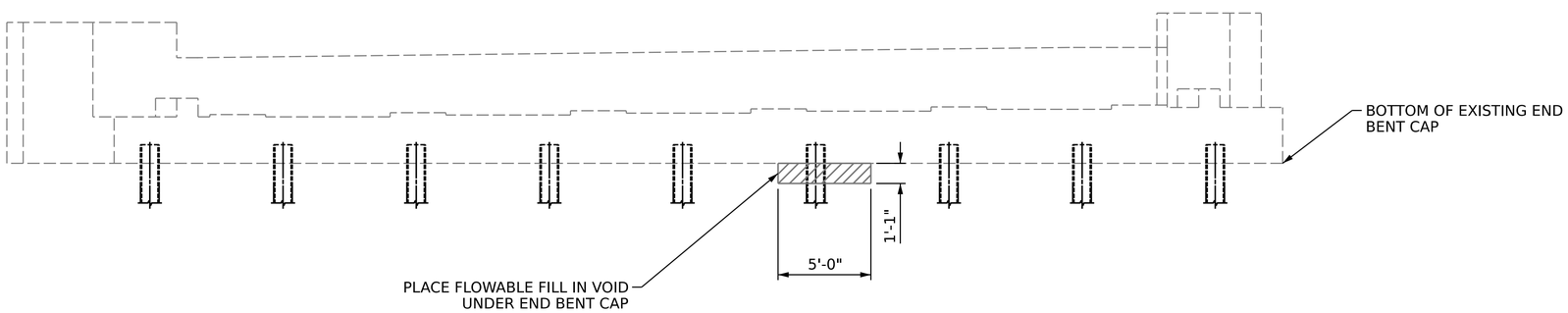

ELEVATION

END BENT 2

(WEST APPROACH)

PROJECT NO. I-5907

SURRY COUNTY

BRIDGE NO. 850355

SHEET 1 OF 1

STATE OF NORTH CAROLINA
DEPARTMENT OF TRANSPORTATION
RALEIGH

END BENT 2 REPAIRS

NORTH CAROLINA PROFESSIONAL SEAL 031021 ENGINEER AMBER M. LEE

DocuSigned by:
B0BB6A8C2FAD484...
02/03/2022

DOCUMENT NOT CONSIDERED FINAL UNLESS ALL SIGNATURES COMPLETED

REVISIONS						
NO.	BY:	DATE:	NO.	BY:	DATE:	
1			3			
2			4			

SHEET NO. S2-07

TOTAL SHEETS 7

DRAWN BY : T.S.PARRISH DATE : 12/2021
CHECKED BY : A.M. LEE DATE : 01/2021
DESIGN ENGINEER OF RECORD: DATE :

2/3/2022
S:\DPG3\Projects\I5907\402_035_I5907_SMU_EBT2_S2-07_850355.dgn
amlee